Proceedings of the IASTED International Conference
SIGNAL PROCESSING, PATTERN RECOGNITION & APPLICATIONS
June 25-28, 2002, Crete, Greece

Single Amplifier, Active-*RC*, Butterworth, and Chebyshev Filters Using Impedance Tapering

Dražen Jurišić
Faculty of Electrical Engineering and Computing, Unska 3,
HR-10000, Zagreb, Croatia

George S. Moschytz
Swiss Federal Institute of Technology (ETHZ-ISI) Sternwartstr. 7,
CH-8092, Zürich, Switzerland

Neven Mijat
Faculty of Electrical Engineering and Computing, Unska 3,
HR-10000, Zagreb, Croatia

ABSTRACT

In this paper the single-amplifier active-*RC* filter design procedure for some common filter types, using tables with normalized filter component values, is presented. The considered filters consist of an *RC* ladder network in a positive feedback loop of an operational amplifier. Tables for the filter structures having equal capacitors and equal resistors were already presented [1],[2]. In this communication, we present tables for designing filters having low sensitivities to variations of passive components achieved by applying the concept of impedance tapering. The Schoeffler sensitivity measure is used as a basis for a sensitivity comparison of the filters designed with equal capacitors, equal resistors and with tapered capacitors. By using an impedance tapering design technique a considerable improvement in sensitivity is achieved. Low-pass filters of up to 6th-order are presented.

KEY WORDS: active-*RC* filters, single-amplifier filters, low-power, low-sensitivity, normalized components.

1. INTRODUCTION

Evaluation of active-*RC* filter quality involves various parameters such as: simple realizability, repeatability, a possibility of straightforward procedure of parameter calculation, small number of components, low power consumption, low noise performance, and most often, a low filter amplitude sensitivity to passive and/or active component tolerances [2],[3]. In this work passive sensitivities of single amplifier low-pass (LP) active filters are considered and improved using a design technique, called "impedance tapering" [4]. It is well known that sensitivities of active filters depend on the transfer function pole Q-factors. This is the reason why the applications of this kind of filters are limited to the realization of transfer functions with low pole Q-factors. It also means that the order *n* of the transfer function should be as low as possible, because low-order filters have lower pole-Q factors than high-order filters. This is particularly true for a Butterworth filter, which has "maximally flat" amplitude response and corresponds to the limit case of no ripple in the filter pass-band. Compared to a Chebyshev filter of equal order, it has lower pole Qs. As was shown in [4], in order to realize a filter with low sensitivities to its component tolerances, the designer should choose a filter with the lowest possible pole Q-factors. For example, a Butterworth filter is always preferable to a Chebyshev filter and a low-ripple Chebyshev filter is preferable to a Chebyshev filter with higher ripple, when the sensitivity to component tolerances is to be held small.

Thus, for low- and high-pass filters of reasonably low order (as for example $n \leq 6$), the use of single-amplifier filters can be advantageous in comparison to the cascade realization with 2nd- and 3rd-order sections, which are presented in [5],[6]. Although the latter already have smaller sensitivities to component tolerances, they can be very improved by applying the "impedance tapering" technique proposed in [4]. Beside the low-power consumption, the advantages of the single-amplifier filters presented here, are in having less passive components. The "impedance tapering" technique can be used for the desensitization of the sections in a cascade structure as well.

2.TRANSFER FUNCTION COEFFICIENTS

Consider the *n*th order allpole low-pass filter circuits with positive feedback presented in Fig. 1.

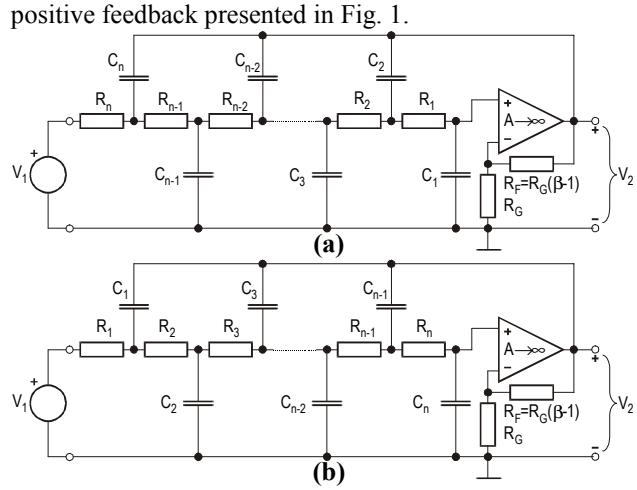

Fig. 1. General *n*th-order single-amplifier low-pass filter. **(a)** With reverse notation. **(b)** With normal notation.

The descending notation of R_n, C_n to R_1, C_1 from the driving source to the amplifier input in Fig. 1(a) is

convenient for developing recursive formulas which determine the transfer function coefficients of the circuits in Fig. 1 as functions of resistors R_i, capacitors C_i and amplifier gain β.

The filter in Fig. 1 has a ladder network in the positive feedback loop of an amplifier with gain $\beta = 1 + R_F / R_G$ representing the gain in the class-4 filter circuit, i.e. filter with positive feedback loop. The transfer function of the nth-order filter presented in Fig. 1(a) is an allpole transfer function having the form:

$$T(s) = \frac{\beta}{D'_n(s)} . \tag{1}$$

As shown in [1] and [2] the coeficients of nth-order denominator polynomial in transfer function (1), i.e.

$$D'_n(s) = \sum_{j=1}^{n} d_j s^j + 1 \tag{2}$$

can be calculated using the coeficients of polynomials of order n-1 and n-2:

$$D'_{n-1}(s) = \sum_{j=1}^{n-1} c_j s^j + 1 \tag{3}$$

and

$$D'_{n-2}(s) = \sum_{j=1}^{n-2} b_j s^j + 1 \tag{4}$$

using the recursion formula

$$d_j = (c_j - b_j)\frac{R_n}{R_{n-1}} + c_j + c_{j-1} R_n C_n - \delta_{1j}\left[\frac{(-1)^n + 1}{2}\right] R_n C_n \beta , \tag{5}$$

where δ_{1j}=0, for $j \neq 1$; and δ_{1j}=1, for j=1 where $1 \leq j \leq n$. Note that $b_0 = c_0 = d_0 = 1$. Note also that for the start of the recursive process polynomials D'_0=1 and $D'_1 = R_1 C_1 s + 1$ are needed.

At the end of recursive process the ascending notation is changed, i.e. we substitute $R_n \rightarrow R_1$, $C_n \rightarrow C_1$, $R_{n-1} \rightarrow R_2$, $C_{n-1} \rightarrow C_2, \ldots$, $R_1 \rightarrow R_n$, $C_1 \rightarrow C_n$, resulting in the notation shown in Fig. 1(b). Consequently we perform multiplication of numerator and denominator with the same factor:

$$N(s) = N'(s)/d_n = \beta \cdot a_0 , \; D(s) = D'(s)/d_n \tag{6a}$$

$$a_j = d_j / d_n, \; 0 \leq j \leq n. \tag{6b}$$

We obtain the form of the transfer function of the nth-order filter given by

$$T(s) = \frac{N(s)}{D(s)} = \frac{\beta a_0}{s^n + a_{n-1} s^{n-1} + \ldots + a_j s^j + \ldots + a_1 s + a_0} . \tag{7}$$

3. CALCULATION AND OPTIMIZATION

The set of nonlinear equations, developed from the use of recursive formulae, after equating each of the coefficients in the polynomial to the appropriate Butterworth or Chebyshev polynomials, are solved numerically. Tables with element values for the circuits having equal capacitors and equal resistors are given in [1] and [2]. They are calculated for some typical amplifier gains (β=2.0 and 2.2), and are not optimized for minimum sensitivity.

In this paper we present tables with normalized components, using exponentialy tapered capacitor values of various orders and types (up to 6th-orders), which are shown in Table 1 and Table 2.

The filters are optimised for minimum sensitivity to component tolerances of the circuit for a chosen tapering factor. As shown in [4], for the 3rd-order low-pass filter case, the optimization of the filter's sensitivities can be performed by choosing the appropriate design frequency $\omega_0 = (R_1 C_1)^{-1}$, which will produce the filter with tapered capacitor values, having minimal sensitivities. Note that in Table 1 and Table 2 we obtain various optimal values for R_1 (i.e. for ω_0, where $\omega_0 = (R_1 C_1)^{-1}$; C_1=1), and gain β. They are calculated using the procedure shown in Fig. 2, which is implemented using the symbolic and numeric calculation program MATHEMATICA [7]. This method is extended to produce low-sensitivity high-pass filters, as well.

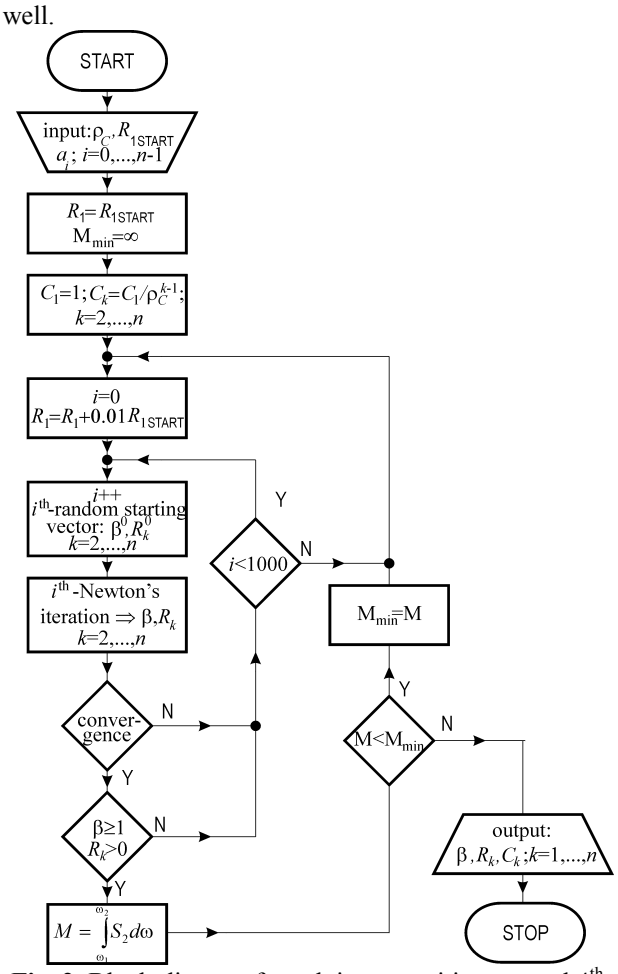

Fig. 2. Block-diagram for solving capacitive tapered 4th-, 5th- and 6th-order filter and optimising design frequency ω_0 for min. sensitivity (choose C_1=1 and optimal R_1).

It can be seen that the capacitive-tapering factors ρ_C for higher-order filters are lower, than those for filters of lower-order n. They are limited by a possibility of achieving the optimal solution. If we try to find the solution of 6th-order Butterworth filter with higher ρ_C (for example ρ_C=3), it is not possible, because the Newton's

method does not converge. Furthermore, larger capacitive tapering factor ρ_C is not permitted since $C_6=C_1/\rho_C^5$ becomes too small and comparable to the parasitic capacitance of the circuit (in the case of integrated filters on a chip). However, in higher-order filters, even small tapering factor satisfies our needs in degree of desensitisation (for example: ρ_C=2.0 is good enough for n=6).

The block diagram shown in Fig. 2 is primarily intended for solving high-order (i.e. 4th-, 5th- and 6th-order) capacitively tapered allpole low-pass filters. Optimization of 2nd- and 3rd-order filters follows the steps in the block diagram shown in Fig. 2 as well, but it is simpler because the calculation of filter components can be performed analytically.

The procedure shown in Fig. 2 is briefly explained in what follows. At the beginning the input parameters are entered, i.e., the values of coefficients a_i (i=0,…, n-1), the chosen tapering factor ρ_C, and C_1=1. Because of capacitive tapering the rest of the capacitors have the values $C_k=C_1/\rho_C^{k-1}$; k=2,…, n. In one step of a solution finding procedure the resistor R_1 has to be defined first. The resistor R_1 is a design parameter to be adjusted, since we have chosen C_1=1. By varying the value of R_1 we vary the value of the design frequency ω_0. For this value R_1 we solve the system of non-linear equations for the vector $R_2,\ldots, R_n$ and β. To achieve a solution, we start with vector of random values for $R_2^0,\ldots, R_n^0$, and β^0. Random initial resistors' values R_k^0 are inside the interval <0.2, 20> and the gain β has values from inside <1, 5>. If the proper value of the starting vector is chosen, Newton's method will, with prescribed accuracy, converge in several steps to the solution, i.e. to the vector $R_2,\ldots, R_n$ and β. If the method fails to converge, we try another random starting vector. If the convergence is achieved but we have a solution with negative resistor values or gain β less than unity, then we, again, choose another random starting vector. We perform random starting vectors for maximum 1000 times. This process of finding a solution is known as *Random Search*. Choosing starting vectors for Newton's iterative solving method can be performed by applying a rule, which tries to find all possible solutions, in which case we have an *Exhaustive Search*. If we do not find all real and positive component values $R_2,\ldots, R_n$ and gain $\beta\geq 1$, we proceed with another value of resistor R_1. If we find real and positive filter elements and gain, we calculate the multiparametrical statistical measure M, which is defined in [8],[9] as:

$$M = \int_{\omega_1}^{\omega_2} S_2(\omega) d\omega . \tag{8}$$

M represents the area under the function $S_2(\omega)$, with borders of integration from ω_1 to ω_2. $S_2(\omega)$ represents the Schoeffler sensitivity function of frequency, while M is a number, and can be used as a goal for the optimizing process. A disadvantage is the dependence of the number M on the selected boundaries of integration (i.e. ω_1 and ω_2). During the whole optimizing process we, therefore, choose the same pair of frequencies ω_1 and ω_2. The above procedure is repeated with a new value for R_1, until the minimum value of M is found.

Note that in Table 1 and Table 2, we obtained a "low-Q" realization of second-order filters with unity-gain (β=1). The capacitive tapering factor ρ_C follows from

$$\rho \leq \rho_{\max} = q_p^2 \frac{(1+r)^2}{r} , \tag{9}$$

and for equal resistors, (i.e. r=1); we have the minimum

$$\rho \leq (\rho_{\max})_{\min} = \rho_{\max}\big|_{r=1} = 4q_p^2 , \tag{10}$$

and with $\rho=(\rho_{\max})_{\min}=4q_p^2$ we obtain β=1.

Furthermore, note that for the 3rd-order filter the values of R_2 and R_3 are very close. This corresponds to the conclusions for 3rd-order low-pass circuits with minimum sensitivity derived in [4].

n	ρ_C	C_1	C_2	C_3	C_4	C_5	C_6	R_1	R_2	R_3	R_4	R_5	R_6	β
2	2	1	0.5					1.41421	1.41421					1.0
3	3	1	0.3333	0.1111				1.09	6.01255	4.11983				1.14231
4	3	1	0.3333	0.1111	0.0370			0.7	7.07694	18.1004	8.13008			1.34647
5	2.5	1	0.4	0.16	0.064	0.0256		2.29	2.26474	8.21287	26.8796	8.32969		1.5333
6	2	1	0.5	0.25	0.125	0.0625	0.03125	0.675	8.63542	5.19291	8.97413	23.3141	5.17416	1.74047

Table 1. Normalized components of capacitive tapered LP filters: Butterworth transfer functions.

n	ρ_C	C_1	C_2	C_3	C_4	C_5	C_6	R_1	R_2	R_3	R_4	R_5	R_6	β
2	2.9841	1	0.3351					1.40289	1.40289					1.0
3	3	1	0.3333	0.1111				1.71	6.5827	3.35148				1.31082
4	3	1	0.3333	0.1111	0.0370			1.31	9.61917	19.9327	7.65695			1.4989
5	2.5	1	0.4	0.16	0.064	0.0256		3.96	4.86466	11.4959	29.8471	8.06382		1.66703
6	2	1	0.5	0.25	0.125	0.0625	0.03125	1.8	14.2659	9.77697	11.7128	23.8853	5.17416	1.84611

Table 2. Normalized components of capacitive tapered LP filters: Chebyshev transfer functions, with 0.5 dB pass-band ripple.

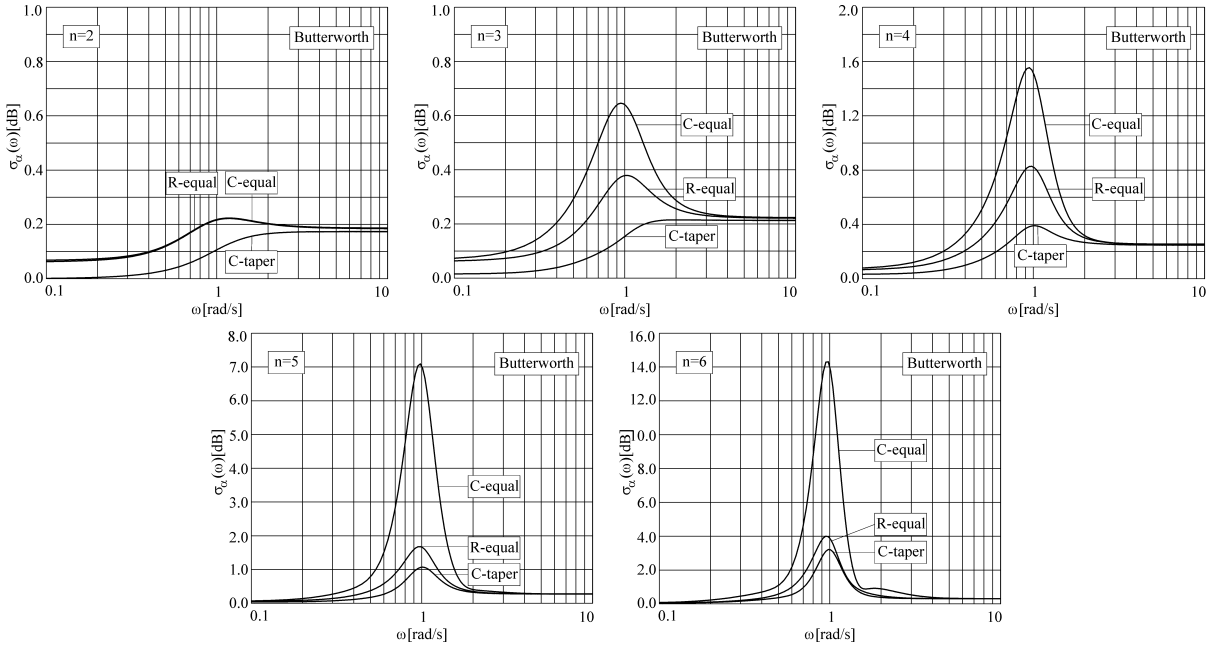

Fig. 3. Schoeffler's sensitivity of normalized Butterworth low-pass filter circuits (up to 6th-order), with components given in Table 1 and in tables presented in [1] and [2] pp. 252.

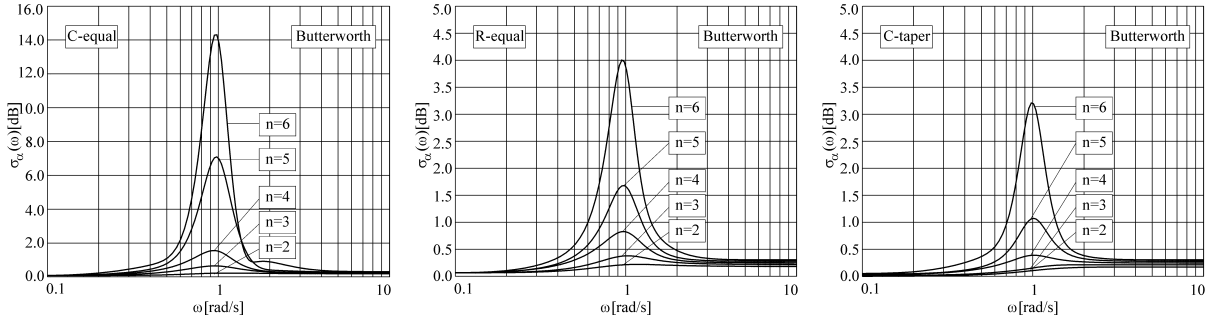

Fig. 4. Schoeffler's sensitivity of normalized Butterworth low-pass filter circuits in Fig. 3, sorted by type of impedance tapering.

4. COMPARISON OF SENSITIVITY

A sensitivity analysis was performed assuming the relative changes of the resistors and capacitors to be uncorrelated random variables, with a zero-mean Gaussian distribution and 1% standard deviation. The standard deviation (which is related to the Shoeffler sensitivities) of the variation of the logarithmic gain $\Delta\alpha$=8.68588 $\Delta|T_{BP}(\omega)|/|T_{BP}(\omega)|$, with respect to the passive elements, is calculated for the normalized values of filter components, for Butterworth filter approximations, for the capacitively tapered filters given in Table 1, and equal capacitors and equal resistors case from tables in [1] and [2] pp. 252, respectively. We have presented the obtained results in Fig. 3.

Observing the standard deviation $\sigma_\alpha(\omega)$[dB] of the variation of the logarithmic gain $\Delta\alpha$ in Fig. 3 we conclude that the capacitively impedance tapered filters have minimum sensitivity to component tolerances of the circuits for all filter orders. The second best results, which are very near, show filter circuits, with equall resistors. This is because, they also have slightly tapered capacitor values, which can be concluded observing Table 1 (Butterworth filter example). The worst sensitivity performances is obtained for filters with equal capacitors. In fact it is usually not practical to mass produce discrete component active-*RC* filters having unequal capacitors. The same investigation was performed for Chebyshev filter approximations and the same results were obtained.

The sensitivity curves in Fig. 3, were repeated in Fig. 4, but they are sorted by impedance tapering type. Observing sensitivity curves in Fig. 4 we conclude that with increasing filter order *n*, sensitivities increase, as well.

5. CONCLUSIONS

A procedure for the design of allpole low-sensitivity, low-power active-*RC* filters using tables with normalized filter component values has been presented. The filters use only one operational amplifier, and a minimum number of passive components. The amplifier itself ensures realization of conjugate-complex filter poles, and a low output impedance. The design procedure using impedance

tapering adds nothing to the cost of conventional circuits; component count and topology remain the same. For reasons related to the filter topology, applying the capacitive impedance tapering, we can improve the sensitivity of the low-pass filters' magnitude to component tolerances [4]. The design is universal, and can be extended to the design of single-amplifier, low-sensitivity high-pass filters. Because, the high-pass filters are dual to the low-pass filters, resistive tapering should be applied to reduce sensitivity of the high-pass filter.

Furthermore, the reduction in power and component count achieved with the single-amplifier LP filters is obtained at a price: a cascade of impedance-tapered "biquads" or "bitriplets" has a lower sensitivity than capacitively tapered single-amplifier filters. Thus the decision on which way to go is typically one of tradeoffs: low power and component count versus low sensitivity.

REFERENCES

[1] R. S. Aikens and W. J. Kerwin, Single amplifier, minimal RC, Butterworth, Thompson and Chebyshev filters to 6th order, *Proc. of Intern. Filt. Symposium*, Santa Monica, California, April 1972, 81-82.

[2] G. S. Moschytz, *Linear integrated networks: design* (Bell Laboratories Series, New York: Van Nostrad Reinhold Co., 1975).

[3] G. S. Moschytz, *Linear integrated networks: fundamentals*. (Bell Laboratories Series, New York: Van Nostrad Reinhold Co., 1974).

[4] G. S. Moschytz, Low-Sensitivity, Low-Power, Active-RC Allpole Filters Using Impedance Tapering, *IEEE Trans. on Circuits and Systems, vol. CAS-46*(8), Aug. 1999, 1009-1026.

[5] G. S. Moschytz and P. Horn, *Active filter design handbook*. (Chichester, U.K.: Wiley 1981).

[6] R. P. Sallen and E. L. Key, A practical Method of Designing RC Active Filters, *IRE Transactions on Circuit Theory, vol. CT-2*, 1955, 78-85.

[7] S. Wolfram, *The MATHEMATICA Book*, (Wolfram Media, IL-USA and Cambridge University Press, Cambridge, UK, 1999).

[8] K. R. Laker and M. S. Ghausi, Statistical Multiparameter Sensitivity—A Valuable Measure for CAD, *Proc. of the IEEE Int. Symp. on Circuits and Systems, ISCAS 1975*, April 1975, 333-336.

[9] C. Acar, M. S. Ghausi and K. R. Laker, Statistical multiparameter sensitivity measures in high Q networks. *J. Franklin Inst., vol. 300*, October 1975, 281-297.